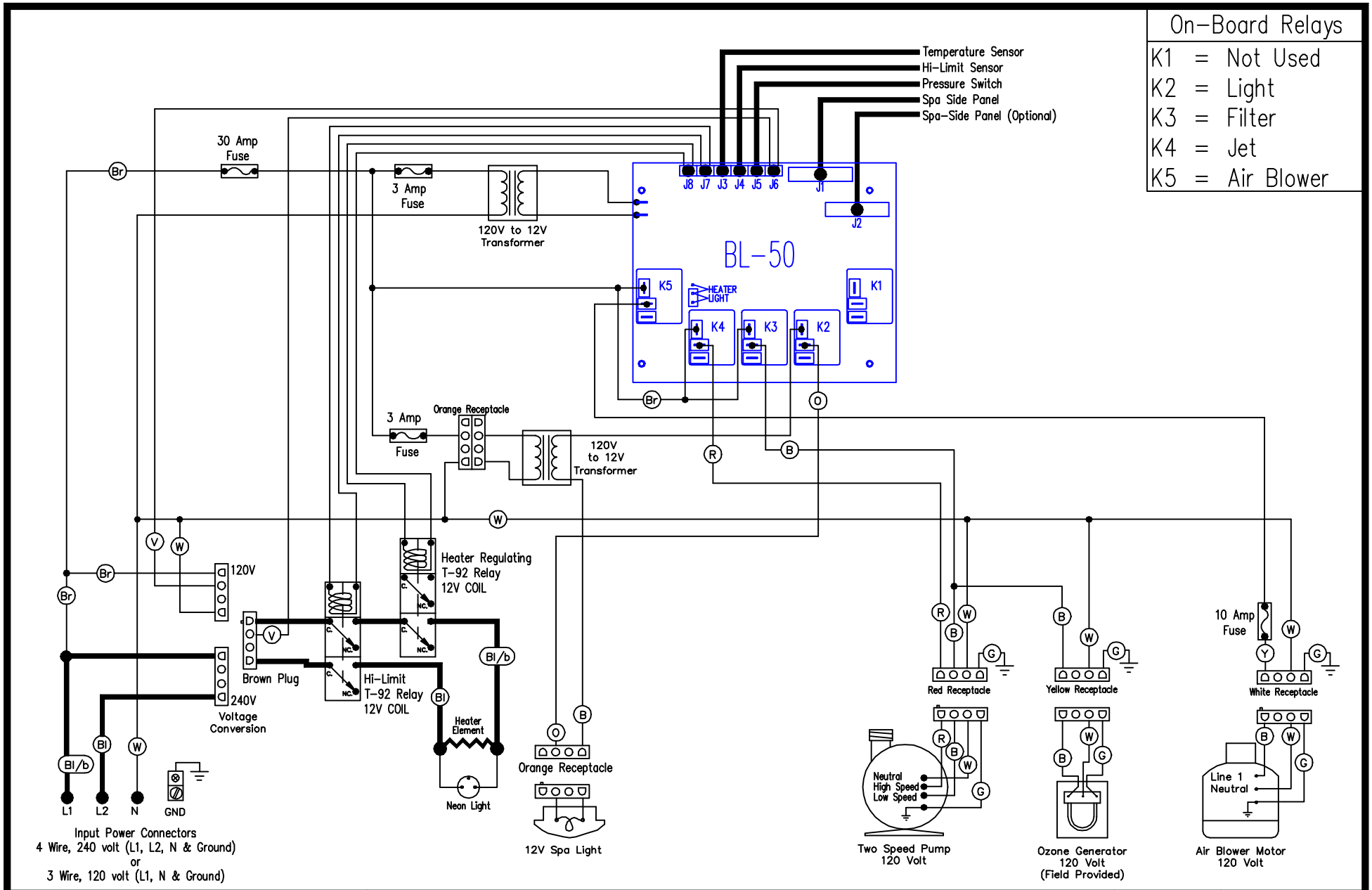

BRETT AQUALINE, INC.
HUNTINGTON BEACH, CA (714) 891-7211

Notes:

Drawing ID: 0067

Catalog Series:	Certification Code:	Model Series:	Input Power:	Air Blower:	Heater:	Internal Controls:	Spa Light:	Additional Pump:	Additional Info:
ANY	–	12 thru 19,Z4 or Z9	0,8 or 9	0,2 or 5	1,2,3 or 5	D2	A,X or Y		

Electronic Controls

Note: 1. Pump & air blower may not be provided by Brett Aqualine

Dwg No:	Date:	Rev:	Drn by	Aprv
-a0a1d2baa1	12-7-95	6	THM	

Wire Color Code

B - Black	G - Green
Br - Brown	Bl - Blue
R - Red	V - Violet
O - Orange	Gr - Gray
Y - Yellow	W - White